WBPF-A008

Electrical Specifications

Parameter	Frequency [MHz]	Specification -40℃ to 85℃	Typical Value @25℃
Center Frequency	1845		
Band Width	280		
Insertion Loss	1705 – 1985	2.5dB max	1.2dB
Passband Ripple	1705 – 1985	1.5dB max	0.5dB
Return Loss	1705 – 1985	10dB min	14dB
Attenuation			
Impedance		50 Ohm	50 Ohm
Input power		1Watt max	

Electrical Performance

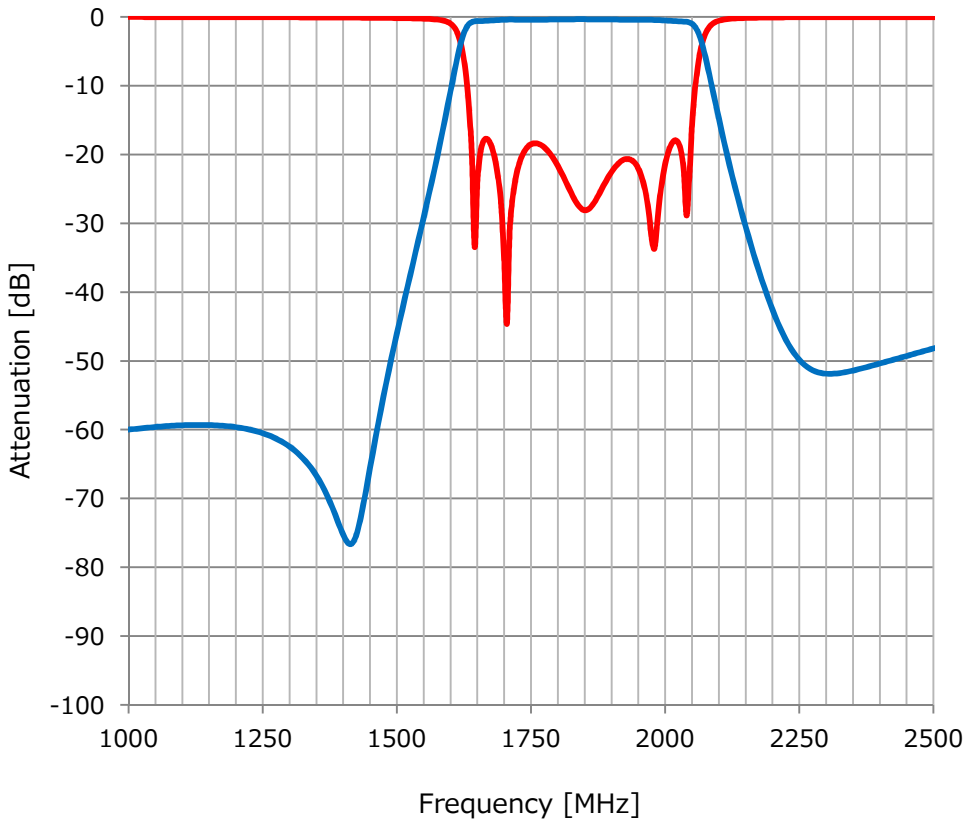

All rights reserved. All Specifications are subject to change without notice.

Mechanical Dimension

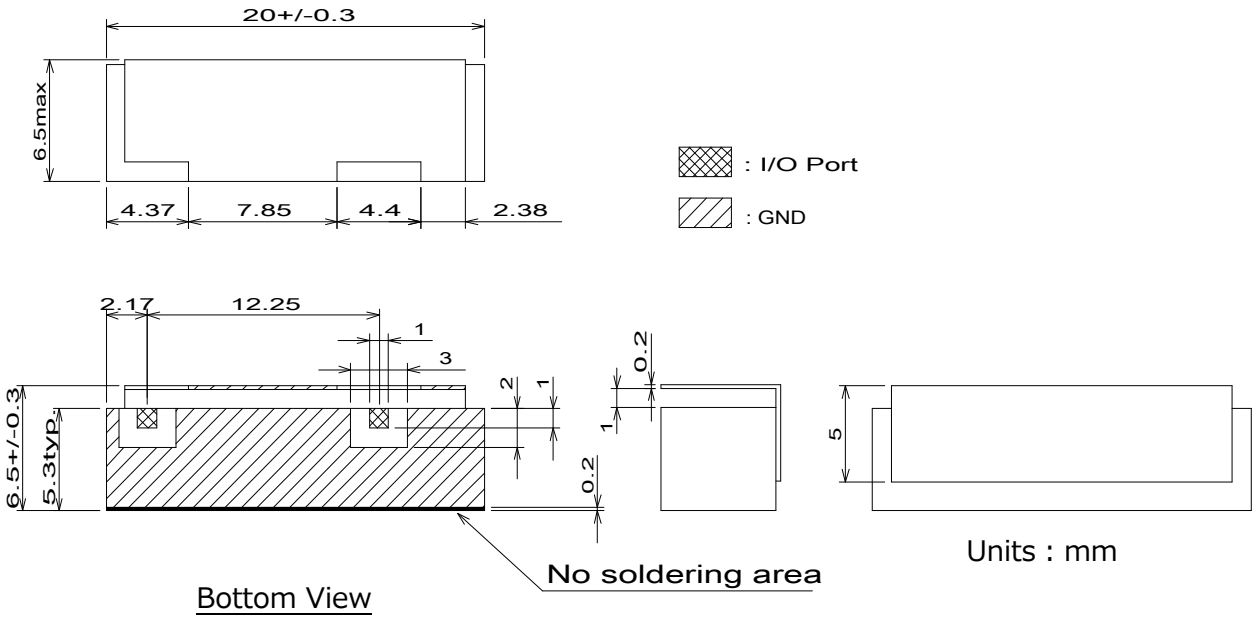

Tolerance unless otherwise specified : +/-0.2mm

Referenced Land Pattern

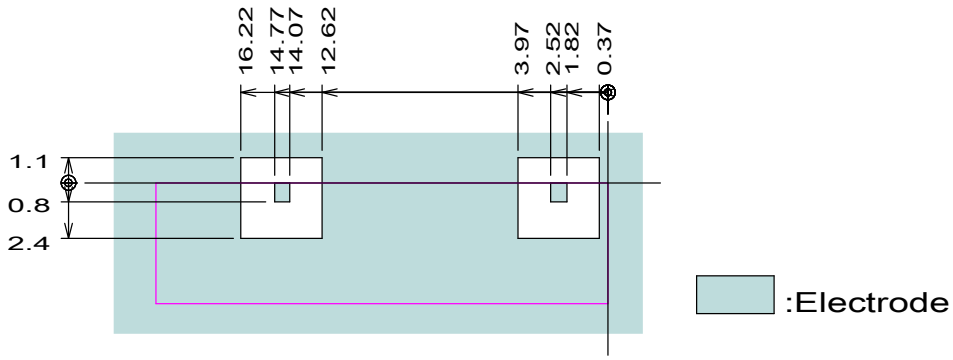

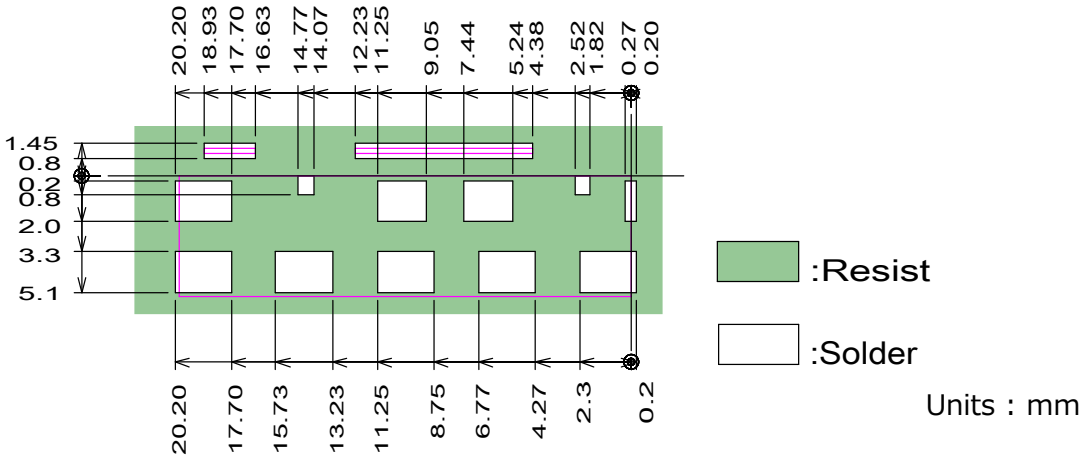

All rights reserved. All Specifications are subject to change without notice.